J. exp. Biol. ***189***, *263–272 (1994)*
Printed in Great Britain © The Company of Biologists Limited 1994

SHORT COMMUNICATION

A STIMULUS PARADIGM FOR ANALYSIS OF NEAR-FIELD HYDRODYNAMIC SENSITIVITY IN CRUSTACEANS

LON A. WILKENS AND JOHN K. DOUGLASS*

Department of Biology, University of Missouri-St Louis, 8001 Natural Bridge Road, St Louis, MO 63121, USA

Accepted 5 January 1994

We present several relatively simple procedures for studying the physiology of near-field mechanoreceptors in crustaceans which extend previous measures of sensitivity. The advantages include the quantitative analysis of range fractionation and directionality of receptors and interneurons in the sensory hierarchy of the central nervous system (CNS), based on a stimulus paradigm that is reproducible and easy to use. The technical considerations for quantitative fluid-coupled stimulation addressed by this paper are the complexity of dipole flow fields, reflected interference from traveling waves, and the underlying stimulus wave form. The techniques described here offer corresponding advantages for physiological experiments using other aquatic organisms.

In electrophysiological experiments, crustacean preparations are typically placed in an experimental chamber filled with water or saline solution. For studies on near-field sensory receptors, i.e. those responding to flow fields in the aquatic medium, a dipole or vibrating sphere is frequently used to generate stimulus waves (Tautz *et al.* 1981; Wiese and Wollnik, 1983; Ebina and Wiese, 1984; Hatt, 1986; Heinisch and Wiese, 1987; Tautz, 1987; Wiese and Marschall, 1990; Killian and Page, 1992*b*). A dipole stimulator is easily constructed by attaching a spherical probe to an electromechanical device such as a loudspeaker, pen motor or piezo crystal. A periodic signal fed to the transducer generates the oscillating dipole movements. With the sphere immersed in the bathing medium, dipole flow fields are generated (see Kalmijn, 1988, for further discussion of dipole sources), whereas dipole oscillations introduced at the air–saline interface generate traveling surface waves.

Numerous additional devices and techniques have been used to stimulate crustacean receptors. Several involve wave motion introduced from one end of the chamber by diaphragms or paddles (Laverack, 1962*b*, 1963; Flood and Wilkens, 1978), by cylindrical dippers (Wilkens and Larimer, 1972; Wiese *et al.* 1976; Wiese and Schultz, 1982; Reichert *et al.* 1983) or by water drops (Laverack, 1962*b*; Strandburg and Krasne, 1985).

*Present address: ARL Division of Neurobiology, 611 Gould-Simpson Building, University of Arizona, Tucson, AZ 85721, USA.

Key words: Crustacea, aquatic, hydrodynamic, mechanosensory, dipole, vertical stimulus orientation, directional sensitivity.

Another form of fluid-coupled stimulation involves small jets of saline (Laverack, 1963; Tautz, 1990; Schmitz, 1992). In other studies, receptor hairs have been stimulated directly by using a stylus in place of the dipole, e.g. a needle or glass capillary in contact with the hair (Laverack, 1962*a*; Killian and Page, 1992*a*; Yen *et al.* 1992; Nagayama and Sato, 1993) or a miniature wire loop or capillary tube placed over the hair shaft (Mellon, 1963; Wiese, 1976; Tautz *et al.* 1981; Killian and Page, 1992*b*).

Each of these techniques introduces complications for quantifying the stimulus–response properties of near-field receptors and/or their postsynaptic interneurons. For example, a local dipole field is highly non-uniform, with off-axis flows in many directions (Kalmijn, 1988). Whereas this type of stimulus may be representative of some biologically relevant signals, and is an appropriate stimulus in the context of behavior, it has limitations for physiological studies at the cellular level, particularly for directional sensitivity. Dipole fields and other forms of traveling waves contribute significantly to response latencies as noted by Ebina and Wiese (1984), suffer from distortion imposed by the walls of the experimental chamber, and are subject to reflected interference except at the chamber's natural harmonic frequency. Wave reflection persists owing to the high inertia of water, and both interference and distortion are compounded by the fact that experimental chambers typically represent only a small fraction of the animal's natural near-field aquatic environment. Water jets are also complex stimuli with variability in associated eddy currents (L. A. Wilkens and J. K. Douglass, personal observations). Direct-coupled stimulation, a valuable technique for describing the structure and function of sensory hairs (e.g. Mellon, 1963; Wiese, 1976), is nonetheless not completely satisfactory in the sense that sensitivity cannot be directly equated with a natural stimulus which is defined not only by stimulus frequency, displacement, velocity or acceleration, but also by the coupling factors of sensillum morphology, hinge stiffness and boundary conditions. For example, threshold velocity measured with direct-coupled stimulation would underestimate threshold values based on the velocities of a fluid-coupled stimulus. In addition, direct coupling is impractical for characterizing interneuronal sensitivity, i.e. where responses are based on broad receptive fields and/or contrast-enhancing mechanisms.

In contrast with aquatic organisms, natural stimulus fields can be created more easily for quantitative physiological studies involving terrestrial organisms. An extensive body of literature exists in which carefully controlled stimulus currents have been generated in the form of wind puffs (e.g. Westin *et al.* 1977; Boyan and Ball, 1989; Kondoh *et al.* 1991) or wind tunnel currents (Kanou and Shimozawa, 1984; Shimozawa and Kanou, 1984), especially for the cercal systems of insects. The study of terrestrial organisms is facilitated by the fact that experimental environments are not constrained dimension-wise by the need to 'hold' small quantities of air, thereby greatly reducing interference and maintaining accessibility.

Previous methods devised to quantify hydrodynamic stimulus currents and eliminate reflections from traveling waves have made use of a horizontal sound field chamber. In a study of vibration sensitivity, Tautz and Sandeman (1980) inserted crayfish chelae into a long (100 cm) tube fitted at the closed end with a rubber diaphragm/loudspeaker and with the open end curved upwards to permit fluid displacements without reflection. In a related

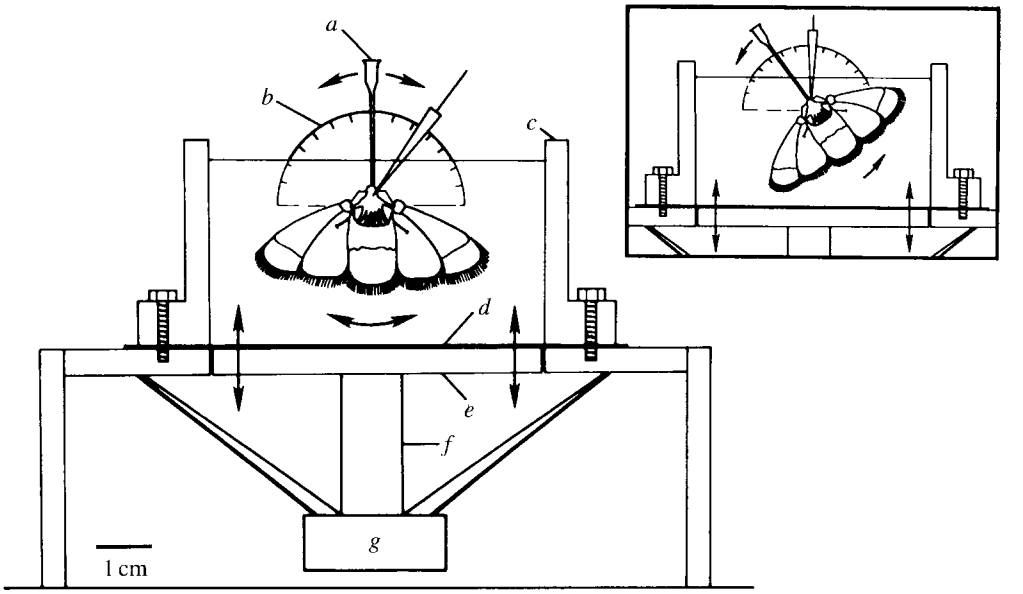

Fig. 1. Diagram of experimental chamber for studying hydrodynamic near-field receptors. The floor of the cylindrical chamber moves freely vertically and is supported by the cone of a loudspeaker mounted on the underside of the platform; a thin rubber membrane prevents loss of fluid. The saline bath therefore moves up and down (vertical arrows) as a uniform laminar stimulus current. The crayfish tailfan, also oriented vertically, is pinned to a pivoting stage (not shown) for rotation of the preparation relative to the vertical stimulus current (see inset). *a*, lever for rotation of preparation; *b*, miniature compass; *c*, Plexiglas chamber cylinder; *d*, rubber membrane; *e*, chamber floor; *f*, support rod for attaching chamber floor to speaker cone; *g*, speaker magnet.

study of frequency sensitivity, Plummer *et al.* (1986) introduced the crayfish tailfan into the top of a cylindrical chamber in which both ends were attached to a loudspeaker, with movement facilitated by rubber membranes. In each of these methods, chamber size is a potential limiting factor since the mass and inertia of water will attenuate displacement amplitudes and require attention to phase lag except at low frequencies.

Our experimental paradigm features stimulus displacements in the vertical plane which can be generated without setting up traveling waves, thereby eliminating or minimizing interference. The preparation is also oriented vertically, instead of the usual horizontal position of test subjects. We have used various permutations of the 'vertical paradigm', each being adaptable for testing most parameters of receptor sensitivity. For example, using a vertical cylinder in which the preparation is suspended from a platform extending from the side wall, the chamber floor acts as a piston and causes the bath solution to move up and down (Fig. 1). With the preparation centered in the bath, at least 1.5 cm from the perimeter, boundary conditions have no effect (Tautz, 1979) and hydrodynamic receptors, in our studies the filiform receptors on the crayfish tailfan, are subjected to unidirectional laminar stimulus currents in response to floor displacements. Alternatively, the entire chamber can be oscillated vertically with the preparation remaining stationary independent of the chamber. An example of this experimental design is illustrated in a

previous study (see Fig. 1 of Schultz and Wilkens, 1988). In this case, potential turbulence along the chamber walls is eliminated since the solution moves with the chamber. Results obtained using each method are comparable.

The volume and inertia of vertical chambers, as with horizontal sound-field chambers, will limit the range of stimulus frequencies that can be reproduced quantifiably. Continuous high-frequency stimulation may create trailing vortices as the preparation vibrates in the viscous aquatic medium (Kalmijn, 1988), resulting in unidirectional current flows superimposed on the periodic stimulus, a phenomenon observed in preliminary studies (T. Shimozawa and L. A. Wilkens, unpublished results). In addition, surface cavitation occurs at higher frequencies or larger displacement amplitudes. Quantitative stimulus–response analyses of receptor sensitivity involving fluid coupling at high frequencies (>50–60 Hz) therefore require careful attention to stimulus calibration.

In view of the constraints for quantifying water movements at high stimulus frequencies, it is helpful to reverse the stimulus paradigm, inducing movements of the preparation relative to a stationary test environment. This is accomplished by attaching the preparation to the electromechanical device. This arrangement has the advantage of increasing the range of stimulus frequencies over which receptor sensitivity can be evaluated, since the mass of the *in vitro* preparation, which may constitute only a small part of the animal, is small compared with that of a water-filled chamber. We have used this technique to analyze crayfish mechanoreceptors on the telson and uropods (Douglass and Wilkens, 1991; Douglass *et al.* 1993). The apparatus is illustrated in Fig. 2 and incorporates a mechanical vibrator as the electromechanical transducer (Pasco, model SF-9324; designed for wave motion experiments in physics laboratories). The vibrator features a built-in mounting post and twin diaphragms and has input–output specifications exceeding those of small loudspeakers, thereby providing wobble-free movements of the preparation at frequencies up to 150 Hz. Attached to the vibrator platform is a saline-filled chamber sealed around the movable post by a thin rubber membrane and stopcock grease. Afferent activity is recorded by suction electrode from the flexible nerve roots of individual tailfan appendages (telson and uropods).

The stimulus wave form is also an important consideration for the analysis of near-field sensitivity. Historically, single or continuous sinusoidal or triangular wave forms have been used as a stimulus source. Periodic signals are often gated for a prescribed number of cycles, and the amplitude may be modulated at onset and offset, to examine frequency-dependent response properties (e.g. Wiese and Wollnik, 1983). Whereas continuous periodic signals are the essence of acoustic (far-field) stimulation in terrestrial as well as aquatic organisms, they present drawbacks (such as cavitation and unidirectional flow, see above) for the analysis of near-field sensitivity, particularly with respect to directionality. For example, with a periodic function, the resulting stimulus movements will be inherently bidirectional. Response profiles for directionally sensitive receptors or interneurons will therefore be compounded by dual, perhaps interfering, stimulus displacements. Response profiles at high stimulus frequencies are especially difficult to interpret in that stimulus transduction and conduction delays may exceed the cycle period. A single sinusoidal or triangular wave form can also constitute a complex

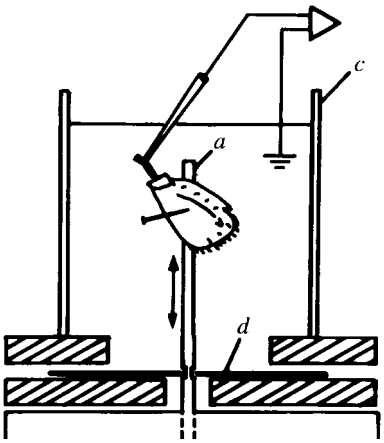

Fig. 2. Diagram of experimental chamber for vertical stimulation in which the bath is stationary and the preparation moves up and down (double-headed arrow). Here, the post of the electromechanical transducer supports the preparation, which again can be rotated in the vertical plane. In principle, an experimental preparation attached directly to the transducer could be inserted into a stationary water bath from above, or obliquely, and the stimulus paradigm would be equivalent. However, resting the transducer on the recording table provides greater stability and does not interfere with electrode placement from above. *a*, transducer post with Sylgard insert (not shown) for pinning the preparation; *b*, Pasco vibrator base; *c*, test chamber (7.5 cm×5 cm×5 cm) made from glass slides glued together with silicone cement; *d*, rubber membrane (exploded diagram).

stimulus owing to the sudden discontinuities of frequency and velocity at onset and offset. Thus, it may be unclear whether receptors are responding to a particular stimulus frequency or velocity or to the onset/offset stimulus transients (Plummer *et al.* 1986).

To avoid these complications, we drive the transducer with a modified sinusoid whose leading and trailing edges are half-cycle cosine waves (Fig. 3). The one-cycle cosine wave, which begins with a particle velocity of zero and thereby minimizes mechanical transients (Kanou and Shimozawa, 1984), is delivered from a function generator (Tektronix, FG 501) triggered by an external rate generator. The cosine wave is arrested at mid-cycle by a large, negative gate pulse (−10 V) fed to the voltage-controlled frequency (VCF) input of the function generator. The VCF gate pulse is delivered from a pulse generator triggered by the rate generator after an appropriate delay. This wave form creates unidirectional stimulus currents in which the repetition rate, the interval separating directional components, the amplitude and the underlying sinusoidal frequency can be controlled independently. Each directional component of the stimulus consists of an approximately constant-velocity current (e.g. where log velocity varies by less than ±15 % of V_{max} for the time interval spanning $\pm\pi/4$ radians on either side of the peak velocity), with gradual displacement onset and offset at the trough and peak. Thus,