Divergence in Proteins, Mitochondrial DNA, and Reproductive Compatibility Across the Isthmus of Panama

Nancy Knowlton; Lee A. Weight; Luis Anibal Solorzano; DeEtta K. Mills; Eldredge Bermingham

Science, New Series, Vol. 260, No. 5114 (Jun. 11, 1993), 1629-1632.

Stable URL:
http://links.jstor.org/sici?sici=0036-8075%2819930611%293%3A260%3A5114%3C1629%3ADIPMDA%3E2.0.CO%3B2-%23

Science is currently published by American Association for the Advancement of Science.

Your use of the JSTOR archive indicates your acceptance of JSTOR's Terms and Conditions of Use, available at http://www.jstor.org/about/terms.html. JSTOR's Terms and Conditions of Use provides, in part, that unless you have obtained prior permission, you may not download an entire issue of a journal or multiple copies of articles, and you may use content in the JSTOR archive only for your personal, non-commercial use.

Please contact the publisher regarding any further use of this work. Publisher contact information may be obtained at http://www.jstor.org/journals/aaas.html.

Each copy of any part of a JSTOR transmission must contain the same copyright notice that appears on the screen or printed page of such transmission.

JSTOR is an independent not-for-profit organization dedicated to creating and preserving a digital archive of scholarly journals. For more information regarding JSTOR, please contact support@jstor.org.

http://www.jstor.org/
Thu May 20 10:35:21 2004

ried out on the basis of only those species known to reach sizes >5 mm in any linear dimension.
12. G. Rosenberg, *Am. Malacol. Bull.*, in press. More than 1000 publications on western Atlantic mollusks were consulted in the compilation of this data base.
13. W. D. Allmon, *Palaios* **8**, 183 (1993).
14. We estimate that the total shelled molluscan fauna of the Pinecrest is about 1050 species. We obtained this number by taking the estimated 801 Pinecrest gastropods and bivalves and adding 20% for species yet to be discovered and 5% for two less diverse classes, the chitons and scaphopods (*29*). This number is the same as a widely cited estimate for the Pinecrest (*9*), which listed 300 species, including 170 gastropods, and gave a total of about 1000 species.
15. A. A. Olsson, in *Miami Geological Society Fieldtrip Guidebook*, R. D. Perkins, compiler (Miami, FL 1968), p. 75.
16. E. J. Petuch, *Proc. Acad. Nat. Sci. Philadelphia* **134**, 12 (1982).
17. In 1977, the Florida fauna was tallied at 1085 gastropods and bivalves (*29*); here we have tallied 1147 (827 gastropods and 320 bivalves), an increase of almost 6%.
18. E. J. Petuch, *Neogene History of Tropical American Mollusks* (Coastal Education and Research Foundation, Charlottesville, VA, 1988).
19. J. K. Reed and P. M. Mikkelsen, *Bull. Mar. Sci.* **40**, 99 (1987); W. G. Lyons, *Fla. Mar. Res. Inst. Publ. 47* (1989).
20. S. M. Stanley, in *Causes of Evolution, a Paleontological Perspective*, R. M. Ross and W. D. Allmon, Eds. (Univ. of Chicago Press, Chicago, 1990), pp. 103–127.
21. K. W. Flessa *et al.*, in *Patterns and Processes in the History of Life*, D. M. Raup and D. Jablonski, Eds. (Springer-Verlag, Berlin, 1986) pp. 232–257.
22. J B. C. Jackson, P. Jung, A. G. Coates, L. S. Collins, *Science* **260**, 1624 (1993).
23. Eastern Pacific data from (*4*) as revised by C. Skoglund, *Festivus* (suppl.) **24**, 1 (1992).
24. T. M. Cronin, *Quat. Sci. Rev.* **10**, 175 (1991).
25. L. W. Ward, R. H. Bailey, J. G. Carter, in *The Geology of the Carolinas*, J. W. Horton and V. A. Zullo, Eds. (Univ. of Tennessee Press, Knoxville, 1991), pp. 274–289.
26. S. M. Stanley, *Paleobiology* **12**, 89 (1986); W. D. Allmon, *Oxford Surv. Evol. Biol.* **8**, 219 (1992).
27 B. W. Blackwelder, *Palaeogeogr. Palaeoclimatol. Palaeoecol.* **34**, 87 (1981); T. M. Cronin, *Geol. Soc. Am. Bull.* **92**, 812 (1981); H. J. Dowsett and T. M. Cronin, *Geology* **18**, 435 (1990).
28. W. D. Allmon, *Palaeogeogr. Palaeoclimatol. Palaeoecol.* **92**, 41 (1992), and references therein.
29. D. Nicol, *Nautilus* **91**, 4 (1977).
30. R. W. Portell, K. S. Schindler, G. M. Morgan, in "The Plio-Pleistocene stratigraphy and paleontology of southern Florida," T. M. Scott and W. D. Allmon, Eds., *Fla. Geol. Surv. Spec. Publ. 36* (1992), pp. 181–194.
31. R. W. Portell, K. S. Schindler, D. S. Jones, *Tulane Stud. Geol. Paleontol.*, in press.
32. We thank A. Collazos, K. Ketcher, and S. Schellenberg for assistance in data analysis and T. Cronin, J. Jackson, D. Jones, and L. Ward for comments on earlier drafts. This paper is University of Florida Contribution to Paleontology no. 415.

19 January 1993; accepted 23 April 1993

Divergence in Proteins, Mitochondrial DNA, and Reproductive Compatibility Across the Isthmus of Panama

Nancy Knowlton,* Lee A. Weigt, Luis Aníbal Solórzano, DeEtta K. Mills,† Eldredge Bermingham

It is widely believed that gene flow connected many shallow water populations of the Caribbean and eastern Pacific until the Panama seaway closed 3.0 to 3.5 million years ago. Measurements of biochemical and reproductive divergence for seven closely related, transisthmian pairs of snapping shrimps (*Alpheus*) indicate, however, that isolation was staggered rather than simultaneous. The four least divergent pairs provide the best estimate for rates of molecular divergence and speciation. Ecological, genetic, and geological data suggest that gene flow was disrupted for the remaining three pairs by environmental change several million years before the land barrier was complete.

Geographic isolation is thought to permit divergence and speciation by disruption of gene flow (*1*). Pairs of marine sister taxa separated by the Isthmus of Panama are ideal for studying these processes (*2–5*) because isolation of the Caribbean and the eastern Pacific is well dated and relatively recent (*6, 7*). This geological framework has prompted study of transisthmian sister taxa to test the accuracy of molecular clocks and to estimate the timing of other evolutionary events (*3, 4, 8*). It has been difficult to interpret inconsistencies and estimate possible phylogenetic differences in divergence rates (*9*), however, because of the limited number of taxa and characters studied. To address these problems, we investigated divergence in allozymes, mitochondrial DNA (mtDNA), and reproductive compatibility for seven shallow water transisthmian pairs of sister taxa in the snapping shrimp genus *Alpheus*.

We used the taxonomic literature to identify transisthmian pairs that were specifically and unambiguously described as each other's closest relatives on the basis of morphological criteria (*10*). Collections along the two coasts and adjacent islands of central Panama at depths less than 5 m revealed unrecognized sibling species in addition to these pairs (*11*). In total, we examined 17 taxa (Table 1): two unambiguous pairs (P4-C4, P5-C5), three triplets (P3-C3, P3-C3′; P6-C6, P6′-C6; P7-C7, P7′-C7), and one quartet (P1-C1, P1-C2, P2-C1, P2-C2). We used shared anatomical and color pattern character states (*12*) to posit relations within the triplets and quartet. The result was seven morphologically defined transisthmian sister species pairs (bold in Tables 1 and 2).

For each taxon, we characterized allozymes by using conventional starch gel electrophoresis (*13*) and sequenced a segment of the mtDNA cytochrome oxidase I (COI) gene (*14*). Aggressive behavior was used as an estimate of behavioral components of reproductive compatibility (*15*) because snapping shrimp attack heterospecific individuals and all conspecifics except potential mates (*16*). We calculated genetic divergence between transisthmian pairs using Nei's D for allozymes and Kimura's corrected percent sequence divergence for mtDNA (*17*). We estimated divergence in behavioral compatibility by standardizing measures of tolerance and intolerance for transisthmian pairs against values observed in intraoceanic, conspecific control matings (*15*).

These three measures of divergence consistently support assignments of transisthmian sister species pairs on the basis of morphology and color pattern. Within the

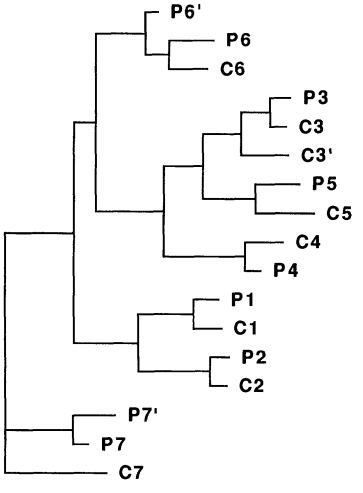

Fig. 1. Single most parsimonious phylogenetic tree constructed on the basis of mtDNA sequences with PAUP (*18*). Transitions were given one-quarter the weight of transversions (based on the fourfold greater abundance of transitions than transversions in our data), and trees were rooted by the P7-P7′-C7 clade. Taxon codes are as in Table 1.

Smithsonian Tropical Research Institute, Apartado 2072, Balboa, Republic of Panama.

*To whom correspondence should be addressed. Alternate mailing address: Smithsonian Tropical Research Institute, Unit 0948, APO AA 34002–0948, United States.
†Present address: Route 2, Box 538, Joshua, TX 76058.

triplets and quartet, transisthmian sister species pairs generally show greater reproductive compatibility, lower allozyme divergence, and lower mtDNA divergence than nonsister transisthmian pairs (compare bold to normal type values in Tables 1 and 2). Parsimony analysis (*18*) of mtDNA sequences also upholds these assignments (Fig. 1).

The seven transisthmian sister species pairs varied nearly threefold or more in molecular and reproductive divergence (Tables 1 and 2). Furthermore, each measure was strongly and significantly (although not perfectly) associated with the other two (Fig. 2). The most conspicuous discrepancy is the low Nei's D relative to mtDNA divergence for pair P1-C1, a pattern also exhibited by one of three studied transisthmian pairs of sea urchins (*4*). The overall agreement among the measures of divergence is best explained by staggered isolation. The null hypothesis, that isolation was simultaneous but rates of divergence are highly variable, is incompatible with the observed pattern because metabolic enzymes, mtDNA, and mate recognition share no mechanistic basis that would cause their divergence rates to be automatically associated.

There are few other tenable explanations for this pattern of concordant variation, and none seems applicable here. Differences in intensity of natural or sexual selection are unlikely to affect all three systems in a parallel fashion and cannot explain the comparable pattern observed for silent mtDNA substitutions (*19*) in any case. Likewise, there is no evidence for differences among the pairs in historical effective population sizes or generation times that can be related to divergence (*20*).

The conclusion that isolation was not simultaneous justifies elimination of the most dissimilar pairs in estimating rates of molecular divergence. Dividing the values of allozyme and mtDNA sequence divergence for pairs P1-C1, P2-C2, P3-C3, and P4-C4 by the estimate for time since final closure of the Panama seaway of 3.0 to 3.5 million years ago (Ma) (*6, 7*) yields an approximate rate of divergence of 0.03 to 0.04 for Nei's D and 2.2 to 2.6% for mtDNA sequence per 10^6 years (*21*). Estimated times since divergence for the remaining three pairs, using these calibrations, are 4.4 to 6.1 (P5-C5), 4.0 to 6.3 (P6-C6), and 6.8 to 9.1 (P7-C7) Ma.

Genetic divergence before final closure may have been facilitated by changing oceanographic conditions. Fossil foraminiferal assemblages suggest a cessation of circulatory connections across the Panama seaway between 12.9 and 7.0 Ma as a result of altered current patterns, followed by return of a restricted shallow water connection that shoaled to a depth of less than 50 m by 6.3 Ma (*7*). By 5.0 Ma, strombinid gastropods showed substantial divergence at the subgeneric level (*22*),

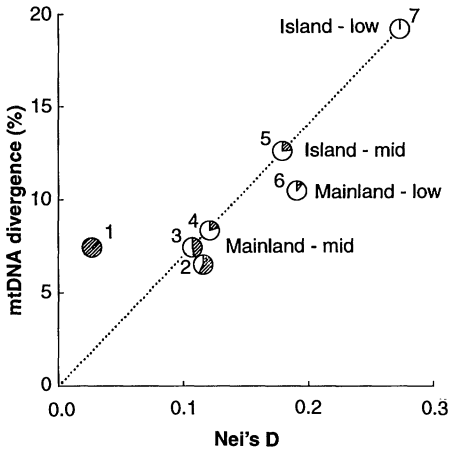

Fig. 2. Relation between allozyme divergence (summarized as Nei's D), mtDNA sequence divergence, and male-female behavioral compatibility for seven transisthmian sister species pairs (bold values in Tables 1 and 2). For each pair, median behavioral compatibility is summarized in pie chart format within the circle indicating the relation between the two measures of biochemical divergence. Data for each pair are independent of data for other pairs. Each measure of divergence is significantly correlated with the other two measures. Spearman rank correlation coefficients are as follows: $r_s = 0.82$, $P < 0.02$ (Nei's D – mtDNA); $r_s = 0.93$, $P < 0.001$ (Nei's D – compatibility); and $r_s = 0.79$, $P < 0.03$ (mtDNA – compatibility). These coefficients are significant as determined by the sequential Bonferroni method (*28*). Habitats for Pacific members of pairs are indicated (*25*). The dotted line connecting the origin and the most divergent pair shows a linear relation between the two biochemical measures that is consistent with the assumption of an initial absence of genetic differentiation.

Table 1. Molecular comparisons (*13, 14*) of transisthmian taxa. The seven pairs of sister taxa are in bold. Currently recognized species names (*10*), with undescribed sympatric sibling species notations (*11*), are as follows: P1, *Alpheus rostratus*; C1, *A. paracrinitus* sp. b; P2, *A. paracrinitus*; C2, *A. paracrinitus* sp. a; P3, *A. panamensis*; C3, *A. formosus* sp. a; C3′, *A. formosus* sp. b; P4, *A. cylindricus*; C4, *A. cylindricus*; P5, *A. saxidomus*; C5, *A. simus*; P6, *A. canalis* sp. b; C6, *A. nuttingi*; P6′, *A. canalis* sp. a; P7 and P7′, *A. cristulifrons*; C7, *A. cristulifrons* (P, Pacific; C, Caribbean). Genetic divergence between pairs was calculated with Nei's D for allozymes and Kimura's corrected percent sequence divergence for mtDNA (*17*).

Taxa	Allozymes	mtDNA COI Mean (range)
P1, C1	**0.028**	**7.7 (7.3–8.2)**
P1, C2	0.183	17.3 (17.0–17.6)
P2, C2	**0.114**	**6.6 (6.4–6.7)**
P2, C1	0.119	17.4 (16.7–18.2)
P3, C3	**0.109**	**7.7 (7.2–8.1)**
P3, C3′	0.124	13.4 (13.1–13.6)
P4, C4	**0.121**	**8.5 (8.4–8.7)**
P5, C5	**0.177**	**13.4 (13.4)**
P6, C6	**0.188**	**10.5 (10.4–10.7)**
P6′, C6	0.224	9.0 (8.7–9.4)
P7, C7	**0.272**	**19.2 (18.6–19.5)**
P7′, C7	0.231	19.7 (19.3–20.4)

Table 2. Behavioral tolerance and intolerance of male-female transisthmian pairs (T) relative to intraoceanic control pairs (I) (*15*). Shown are the proportion paired, number of passive contacts, number of snaps, number of aggressive contacts, and overall compatibility (median of the four measures). Species are as described in Table 1. No data are available for the P7′-C7 combination. Low values indicate that transisthmian pairs showed little tolerant behavior or much intolerant behavior relative to intraoceanic pairs of the same taxa. Note that behavioral pairing does not necessarily lead to production of fertile clutches. During a 30-day period after these behavioral observations, only one replicate of transisthmian pair P3-C3 produced fertile clutches (representing 1% of all transisthmian pairs tested, in contrast to 60% production of fertile clutches by intraoceanic control pairs).

Taxa	Tolerance (T/I)		Intolerance (I/T)		Compatibility
	Paired	Passive contacts	Snaps	Aggressive contacts	
P1, C1	**0.86**	**1.97**	**2.18**	**0.49**	**1.42**
P1, C2	0.00	0.00	0.11	0.10	0.05
P2, C2	**0.67**	**0.33**	**1.40**	**0.48**	**0.58**
P2, C1	0.00	0.02	0.15	0.10	0.06
P3, C3	**0.45**	**0.66**	**0.49**	**0.31**	**0.47**
P3, C3′	0.00	0.03	0.35	0.26	0.15
P4, C4	**0.00**	**0.07**	**0.33**	**0.53**	**0.20**
P5, C5	**0.33**	**0.51**	**0.14**	**0.13**	**0.24**
P6, C6	**0.00**	**0.01**	**0.33**	**0.19**	**0.10**
P6′, C6	0.00	0.00	0.09	0.04	0.02
P7, C7	**0.00**	**0.01**	**0.14**	**0.00**	**0.01**

and carbonate-associated benthic foraminiferal communities of the southern Caribbean were established (*23*). Hence, pairs P5-C5 and P6-C6 probably separated during the period of marked shoaling and environmental divergence preceding final closure. The isolation of P7/P7′ from C7 perhaps occurred when the hypothesized earlier circulatory barrier was in place, followed by failure to interbreed when partial connection between the oceans was reestablished. Environmental transitions also appear to have prompted intraoceanic divergences (*24*).

All the shrimps we studied are shallow water, fully marine forms with planktonic larvae. However, they do show some distributional differences that could affect sensitivity to changing conditions associated with gradual rise of the isthmus. Pacific members of the most divergent pairs are found deeper in the intertidal or are rare in habitats with heavy sedimentation (*25*) (Fig. 2). Thus, larval avoidance (*26*) of shoaling waters over the rising isthmus (*6, 7*) may have accelerated genetic isolation of these pairs.

Our data can also be used to estimate rates of divergence in reproductive compatibility. Even the least divergent pairs show substantial reproductive isolation, but considerable behavioral compatibility and sporadic production of fertile clutches occur (Table 2). This observation suggests that, as in other groups (*5, 27*), 3.0 to 3.5 million years may be the minimum time required for development of strong reproductive isolation under the classic allopatric model of division into two large populations without secondary contact.

REFERENCES AND NOTES

1. E. Mayr, *Animal Species and Evolution* (Harvard Univ. Press, Cambridge, 1963).
2. D. S. Jordan, *Am. Nat.* **42**, 73 (1908); E. Mayr, *Evolution* **8**, 1 (1954); I. Rubinoff, thesis, Harvard University (1963); G. J. Vermeij, *Biogeography and Adaptation* (Harvard Univ. Press, Cambridge, MA, 1978); D. S. Jones and P. F. Hasson, in *The Great American Biotic Interchange*, F. G. Stehli and S. D. Webb, Eds. (Plenum, New York, 1985), pp. 325–355; J. R. Weinberg and V. R. Starczak, *Mar. Biol.* **103**, 143 (1989); H. A. Lessios, *Am. Nat.* **135**, 1 (1990).
3. H. A. Lessios, *Nature* **280**, 599 (1979); A. T. Vawter, R. Rosenblatt, G. C. Gorman, *Evolution* **34**, 705 (1980); H. A. Lessios, *ibid.* **35**, 618 (1981); T. Collins, *Paleontol. Soc. Spec. Pub.* **6**, 68 (1992).
4. E. Bermingham and H. A. Lessios, *Proc. Natl. Acad. Sci. U.S.A.* **90**, 2734 (1993).
5. R. W. Rubinoff and I. Rubinoff, *Evolution* **25**, 88 (1971); H. A. Lessios, *ibid.* **38**, 1144 (1984); _____ and C. W. Cunningham, *ibid.* **44**, 933 (1990).
6. T. Saito, *Geology* **4**, 305 (1976); L. D. Keigwin, Jr., *Science* **217**, 350 (1982), A. G. Coates *et al.*, *Geol. Soc. Am. Bull.* **104**, 814 (1992); but see G. Keller, C. E. Zenker, S. M. Stone, *J. S. Am. Earth Sci.* **2**, 73 (1989).
7. H. Duque-Caro, *Palaeogeogr. Palaeoclimatol. Palaeoecol.* **77**, 203 (1990); but see P. F. Hasson and A. G. Fischer, *Micropaleontology* **32**, 32 (1986).
8. S. A. McCommas, *Mar. Biol.* **68**, 169 (1982); A. P. Martin, G. J. P. Naylor, S. R. Palumbi, *Nature* **357**, 153 (1992).
9. J. H. Gillespie, *The Causes of Molecular Evolution* (Oxford Univ. Press, New York, 1991).
10. Pacific taxa: W. Kim and L. G. Abele, *Smithson. Contrib. Zool.* **454**, 1 (1988); L. B. Holthuis, *Zool. Meded.* **55**, 47 (1980). Caribbean taxa: F. A. Chace, Jr., *Smithson. Contrib. Zool.* **98**, 1 (1972).
11. N. Knowlton and D. K. Mills, *Proc. San Diego Soc. Nat. Hist.* **18**, 1 (1992).
12. Character states linking transisthmian pairs within the triplets and quartet are as follows: presence or absence of dorsal spots and divided or single terminal abdominal band (pairs P1-C1 and P2-C2, respectively), balaeniceps minor chela in both sexes (pair P3-C3), and blue antennae and absence of movable spine on ischium of 3rd pereopod (pair P6-C6). Currently P7 and P7′ can only be distinguished biochemically, and they apparently diverged after the Caribbean-Pacific split (see Fig. 1).
13. We used standard horizontal starch gel electrophoresis techniques and terminology [R. W. Murphy, J. W. Sites, Jr., D. G. Buth, C. H. Haufler, in *Molecular Systematics*, D. M. Hillis and C. Moritz, Eds. (Sinauer, Sunderland, MA, 1990), pp. 45–126]. Sixteen loci are shared across all species [except P1, C1, P2, C2 (no activity for OPDH) and P5, C5 (no activity for OPDH, FUMH, ALD, LDH-1)]. Five loci were monomorphic (PER, GP, FUMH, LDH-1, CK), and 11 were polymorphic (ALD, MDHP, LDH-2, GDH, ICD, MDH-1, MDH-2, OPDH, GPI, TPI-2, PGM). Mean sample size per locus averaged across all species was 18.7, and the percentage of polymorphic loci ranged from 12.5 to 37.5%, with an average of 20.9%. Data were analyzed with BIOSYS-1 [D. L. Swofford and R. B. Selander, *J. Hered.* **72**, 281 (1981)].
14. Genomic DNA was extracted from individual shrimp, and for most species a 681–nucleotide pair (np) region was amplified by the polymerase chain reaction and mtDNA COI a and f primers [S. Palumbi *et al.*, *The Simple Fool's Guide to PCR* (Department of Zoology, University of Hawaii, Honolulu, 1991)]. A 640-np region of species P1, C1, P2, C3, and P7 was amplified with an *Alpheus*-specific primer (H7188 5′-CATTTAGGCCTAAGAAGTGTTG-3′) with COI f, and a 511-np region of species C2 was amplified with two *Alpheus*-specific primers (H7083 5′-AATARGGGGAATCAGTGGGCAAT-3′ and L6595 5′-TATATCAACACTTATTTTGATT-3′). Both the light and heavy mtDNA strands were sequenced, in separate experiments, after λ exonuclease digestion of the double-stranded amplification product or with double-stranded sequencing methods. Two individuals from each of the 17 taxa were sequenced, yielding four divergence values for each pair of taxa. On average, 76% of the sequence analyzed was verified by the overlapping of light and heavy strands.
15. We observed the behavior of a male and female placed in a glass dish with a small shelter for 30 min and recorded two measures of tolerance (number of passive contacts, paired versus separate at end of observation period) and two measures of intolerance (number of snaps, number of aggressive contacts) [see (*16*) for methods]. Males and females were above minimum reproductive size, matched in size, and were used only once. For each related pair of transisthmian taxa, we performed four categories of experiments: two intraoceanic (Caribbean male + Caribbean female, Pacific male + Pacific female) and two transisthmian (Caribbean male + Pacific female, Caribbean female + Pacific male). Replicates of each (generally three to four) were used to calculate the percentage of trials resulting in pairing and the mean numbers of snaps, aggressive contacts, and passive contacts per trial. From these data, mean intraoceanic and transisthmian values were calculated for each of the four behavioral measures. We calibrated transisthmian encounters against intraoceanic encounters involving the same taxa by dividing one by the other (transisthmian divided by intraoceanic values for tolerant interactions, intraoceanic divided by transisthmian values for intolerant interactions), so that the larger the value, the greater is transisthmian behavioral compatibility relative to intraoceanic controls.
16. B. A. Nolan and M. Salmon, *Forma Functio* **2**, 289 (1970); N. Knowlton and B. D. Keller, *Behav. Ecol. Sociobiol.* **10**, 289 (1982); *Bull. Mar. Sci.* **37**, 893 (1985).
17. M. Nei, *Genetics* **89**, 583 (1978); M. Kimura, *J. Mol. Evol.* **16**, 111 (1980).
18. D. L. Swofford, PAUP: Phylogenetic Analysis Using Parsimony, version 3.1; (Illinois Natural History Survey, Champaign, IL, 1993).
19. The mean percentages of fourfold degenerate sites with transversions were 7.2 (P1-C1), 4.2 (P2-C2), 3.6 (P3-C3), 3.0 (P4-C4), 10.1 (P5-C5), 10.6 (P6-C6), and 26.9 (P7-C7).
20. If differences in historic population sizes were responsible for the concordant variation in divergence, then the most divergent pairs should show the lowest heterozygosities [M. Nei, T. Maruyama, R. Chakraborty, *Evolution* **29**, 1 (1975); R. Chakraborty and M. Nei, *ibid.* **31**, 347 (1977)]. Average heterozygosity values ranged from 0.016 to 0.080 (observed) and 0.015 to 0.125 (Hardy-Weinberg expected). There was no relation between heterozygosity (minimum, maximum, or mean of Caribbean and Pacific values) and any measure of divergence [for Spearman rank correlations, table-wide *P* values are insignificant for a sequential Bonferroni test (*28*); the only two individually significant values showed a correlation in the direction opposite that expected]. Similarly, if differences in generation time produced the concordant pattern, then the smallest taxa should show the greatest divergence because of a positive correlation between body size and generation time [R. H. Peters, *The Ecological Implications of Body Size* (Cambridge Univ. Press, Cambridge, 1983), p. 132] and a negative correlation between generation time and rate of evolutionary change (*9*). Published maximum carapace lengths ranged from 6.1 to 15.1 mm for the Pacific species (*10*). There is no correlation between maximum size and any measure of divergence (for Spearman rank correlations, all *P* values >0.6).
21. Medians of mean mtDNA divergences and Nei distances (Table 1) for the four pairs were used. These calibrations assume a linear relation between time and divergence for the spans over which they are calculated or applied. They are broadly consistent with previous studies (*3, 4, 8*), although enzyme systems and mtDNA regions are not equivalent.
22. J. B. C. Jackson, P. Jung, A. G. Coates, L. S. Collins, *Science* **260**, 1624 (1993). This study also reveals variation in the timing of divergence comparable to that exhibited by *Alpheus*.
23. L. S. Collins, *Paleontol. Soc. Spec. Pub.* **6**, 67 (1992).
24. Values of mean corrected percent sequence divergences for sympatric members of sibling species complexes are 8.1 (P1-P2), 16.4 (C1-C2), 12.1 (C3-C3′), 7.6 (P6-P6′), and 6.3 (P7-P7′). Nei's D values are 0.109 (P1-P2), 0.194 (C1-C2), 0.165 (C3-C3′), 0.216 (P6-P6′), and 0.019 (P7-P7′).
25. Habitat differences are most conspicuous in the Pacific [P. W. Glynn, *Bull. Biol. Soc. Wash.* **2**, 13 (1972)]. Species P7 is normally collected in the shallow subtidal of offshore islands in dead coral, species P6 is only collected during extreme low tides (−60 to −85 cm), and species P5 is mid-intertidal but restricted to clearer waters of offshore islands. In contrast, species P1, P2, P3, and P4 are abundant in the mid- to low-intertidal zone along the mainland.
26. The swimming abilities of crustacean larvae permit considerable habitat choice [R. S. Burton and M. W. Feldman, in *Estuarine Comparisons*, V. S. Kennedy, Ed. (Academic Press, New York, 1982),

pp. 537–551], and distributions of larvae in the water column may reflect depth distributions of shallow-water adults [R. K. Grosberg, *Ecology* **63**, 894 (1982)].
27. J. A. Coyne and H. A. Orr, *Evolution* **43**, 362 (1989).
28. W. R. Rice, *ibid.*, p. 223.
29. We thank J. Jara, F. Bouche, E. Gomez, and R. Hamilton for technical assistance; E. Duffy, A. Herre, J. Jackson, H. Lessios, A. Martin, P. Morris, R. Rowan, and D. Zeh for comments on the manuscript; the Smithsonian Institution for financial support; and the Government of Panama (Recursos Marinos) and the Kuna Nation for permission to collect specimens.

19 January 1993; accepted 26 April 1993

Large Odd-Numbered Carbon Clusters from Fullerene-Ozone Reactions

Stephen W. McElvany, John H. Callahan, Mark M. Ross, Lowell D. Lamb, Donald R. Huffman

The odd-numbered carbon clusters C_{119}, C_{129}, and C_{139} have been observed in the mass spectra of toluene extracts of fullerene soots and of the products of ozone-fullerene reactions. Specifically, ozone-C_{60} reactions yield C_{119}, ozone-C_{70} reactions yield C_{139}, and ozone-(C_{60}/C_{70}) reactions produce C_{119}, C_{129}, and C_{139}. These unexpected species correspond to dimers of C_{60}, C_{60}/C_{70}, and C_{70}, respectively, less one carbon atom, and are stable gas-phase ions with behavior similar to that of fullerenes. The results suggest a new route to functionalization and derivatization of fullerenes through controlled ozone-catalyzed cage-opening reactions.

Numerous studies have shown that there is a wide variety of fullerene chemical reactions (*1*). For example, one unusual aspect of fullerenes is their ability to undergo coalescence reactions that result in larger fullerenes (*2–4*). Although the details of these reactions vary, in all cases observed to date coalescence apparently was caused by photon-induced radiation damage of fullerenes, and in all cases the reaction products had even numbers of carbon atoms.

In a recent mass-spectral investigation of large fullerenes, we detected the presence of the odd-numbered, pure carbon clusters C_{119}, C_{129}, and C_{139} in toluene extracts of several fullerene soot samples, which we speculated to be the products of coalescence of two C_{60}'s, a C_{60} and C_{70} and two C_{70}'s, respectively. These large, odd-numbered carbon clusters are unexpected, given the overwhelming evidence for the preferential stability of large, even-numbered carbon clusters (*5*). Results from a subsequent series of ozonolysis experiments support this interpretation and suggest that oxidation plays a key role in the production of these unusual species. These results have implications for several important issues in fullerene chemistry, including chemical reaction mechanisms and the resulting fullerene-based products, coalescence of fullerenes, and the molecular structure consideration raised by the existence of odd-numbered "fullerenes."

S. W. McElvany, J. H. Callahan, M. M. Ross, Code 6113/Chemistry Division, Naval Research Laboratory, Washington, DC 20375-5320.
L. D. Lamb and D. R. Huffman, Department of Physics, University of Arizona, Tucson, AZ 85721.

A typical thermal desorption–negative ion mass spectrum (*6, 7*) of a toluene extract (*8*) of a commercial soot sample (*9*) is shown in Fig. 1. Although not shown, C_{60}^- and C_{70}^- are approximately 10^3 to 10^4 times more abundant than the base peak in this spectrum. As expected, the abundances of fullerene ions (C_n^-, $n > 74$) generally decrease with increasing size, with anomalously abundant C_{84} and C_{90}. However, in addition to the even-numbered carbon clusters, ions are observed corresponding to C_{119}, C_{129}, and C_{139}. These odd-numbered carbon clusters were detected in a commercially available, unchromatographed mixture of fullerenes (*9*), as well as in toluene extracts of various fullerene soots [Polygon, SES (*9*), and "homemade" soot (*7*) produced at the Naval Research Laboratory].

In order to test the interpretation of the mass-spectral results, two alternative explanations had to be ruled out. Namely, it was possible that these clusters were not stable species but only artifacts of the mass spectrometry, that is, these ions were generated in the desorption-ionization process. In contrast to positive ion or laser desorption analysis, which may be complicated by fragmentation or coalescence of molecular species, previous studies of fullerenes indicate that thermal desorption–negative ion analysis is much less prone to these artifacts (*7*). A second possibility was that these were not pure carbon molecules. The relative ion abundances in the distribution from mass-to-change (m/z) ratios 1428 to 1433 were measured to be identical (within experimental error) to those calculated for C_{119} based on the natural ^{13}C abundance (see inset of Fig. 1). Similar results were obtained for C_{129} which indicated that these ions correspond to odd-numbered all-carbon species. (The abundance of C_{139}, however, was too low to allow this type of analysis.) Further investigations showed that the presence of the odd-numbered carbon clusters is not affected by the solvent, as they are also observed in hexane and benzene extracts of fullerene-rich soot. Careful inspection of mass spectra (not shown) of the raw (unextracted) soot revealed very low abundances of these ions (~500 times less abundant than neighboring even-n C_n). This observation and the analysis of the soot toluene extract (Fig. 1) suggest that the odd-numbered clusters are more soluble than the comparably sized even-numbered fullerenes. In addition, the use of ammonia or argon instead of methane as the buffer gas in the analysis yielded similar results, indicating that the formation of odd-numbered clusters is not due to the buffer gas.

As a complement to the negative ion analyses described above, electron ionization to generate positive ions of thermally

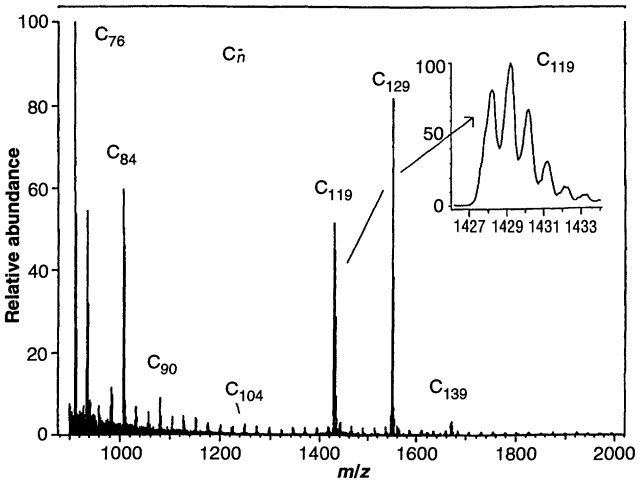

Fig. 1. Negative ion mass spectrum of a toluene extract of graphitic soot with the inset showing the expanded region around C_{119}^-