Animal Societies: Theories and Facts (Itô, Y., Brown, J. L., and Kikkawa, J., eds.), pp. 35–51, Japan Sci. Soc. Press, Tokyo (1987)

3

Flexible Strategy and Social Evolution

MARY JANE WEST-EBERHARD*

Smithsonian Tropical Research Institute, Balboa, Panama

Animal Societies: Theories and Facts (Itô, Y., Brown, J. L., and Kikkawa, J., eds.), pp. 35–51, Japan Sci. Soc. Press, Tokyo (1987)

3

Flexible Strategy and Social Evolution

MARY JANE WEST-EBERHARD*

Smithsonian Tropical Research Institute, Balboa, Panama

One way in which a new organismic character can originate is *via* allelic replacement: a mutant genetic allele increases in frequency under selection favouring the affected phenotype(s) until it replaces other, alternative alleles or is held at some stable frequency in the population. This mode of origin is assumed in most genetic models of social evolution (*e.g.*, see reviews by Michod, 1982; O'Donald, 1980). However, such a model does not by itself give a satisfactory account of most social traits, which are facultatively expressed in ways that appear to be situation-appropriate, or 'adaptive.' For example, the expression of the 'worker' (sterile helper) *vs.* the 'queen' (reproductive) phenotype in social insects depends not on a genetic difference between the two forms, but on developmental circumstances; and field studies of primitively eusocial species indicate that the helper role is adopted only when likely to be advantageous (in terms of inclusive fitness) to the individual concerned (*e.g.*, see Noonan, 1981; Strassmann, 1981; West, 1967). Does such phenotypic flexibility originate with a mutation at a locus controlling helping behaviour and then become

* Address for correspondence: Escuela de Biologia, Universidad de Costa Rica, Ciudad Universitaria, Costa Rica, Central America.

elaborated *via* a series of similar allelic replacements? Or do allelic replacement models, whether single-locus or polygenic, give a misleading view of how flexible alternatives evolve? This is the question I wish to explore in this essay.

My approach will be to begin, not with genes, but with phenotypes: What is the nature of a flexible behaviour pattern and how might it originate? Then, using comparative studies of wasps I will attempt to show how major new social phenotypes can originate *via* environmental change and genetic changes that only indirectly affect social behaviour.

3.1 THE STRUCTURE AND EVOLUTION OF PHENOTYPIC FLEXIBILITY

In one sense, all phenotypes are 'flexible,' in that all are products of both genotype and environmental or developmental conditions (*e.g.*, see Dobzhansky, 1937). Thus, all phenotypes are to some degree condition sensitive. But not all condition-sensitive phenotypic variation is adaptive (in the sense of Williams, 1966). How does a set of alternative behaviour patterns or morphologies become established such that each alternative is appropriately specialized (adapted) to the situation in which it is expressed? The challenge is to explain the evolution of a capacity for two or more complex phenotypes, and a switch mechanism governing their adaptive expression.

One possibility is that condition-sensitive flexibility is derived from a stable genetic (allelic-switch) polymorphism. There are many theoretical models showing how allelic polymorphisms can be maintained, *e.g.*, *via* frequency-dependent selection or in heterogeneous environments (partially reviewed in West-Eberhard, 1986). And there are some models showing how such polymorphisms might be transformed into facultative alternatives *via* selection for a condition-sensitive switch (*e.g.*, see Leigh *et al.*, 1976). Alternatively, the evolution of complex alternatives might begin with the establishment of a condition-sensitive allele (or small set of alleles) (Craig, 1983). These models for the origin of phenotypic flexibility are allelic replacement models but they differ from those most common in the evolutionary genetics of sociality (*e.g.*, Michod, 1982) in that they deal with the spread of an adaptively condition-sensitive regulatory allele, rather than an allele which consistently raises the likelihood of expression of a single phenotype. Such models probably explain the origin of certain examples of phenotypic plasticity found in nature, *e.g.*, sex change

in fish (Leigh *et al.*, 1976), and seasonal polyphenisms of butterflies (Shapiro, 1976.)

Alternative phenotypes can evidently also originate due to developmental suppression of intermediate forms under disruptive selection in an originally continuous distribution (Bradshaw, 1973; Eberhard, 1980). If the original array of phenotypes was underlain by a particular (continuous) distribution of some environmental determinant (*e.g.*, temperature or nutritional conditions during development), then the discrete extremes will continue to reflect variation in that determinant, which becomes the basis for condition-sensitivity in canalizing development of alternative forms.

Comparative data on social organisms suggest two other ways in which flexible traits can originate, namely:

(1) Origin as a pleiotropic side effect of selection favouring other facultative traits; and

(2) Origin *via* a contextual shift.

In the case of origin as a pleiotropic side effect, the character in question begins as a new or emergent secondary product of selection in another context, and the regulation of its expression, at least at the time of its origin, depends on the regulation of the primary (selected) trait. As I shall argue below, group life can originate as a pleiotropic side effect of selection for re-use of unoccupied cells in a parental nest. This behaviour pattern, is condition-sensitive, since if no empty cells are available an individual may leave; so the pleiotropic effect—group life—has a 'programmed' alternative—solitary life.

In the case of origin *via* contextual shift, the character in question begins as an old character in a new context, and its facultative expression, at least at the outset, is regulated by the same (or similar) cues that stimulated it in the original context. Evolutionary origin *via* contextual shift is implicit in the idea of 'preadaptation' (see Mayr, 1963), a classic example being the origin of legs from pectoral fins when aquatic vertebrates invaded (or became stranded on) land. A contextual shift can occur due to environmental change, with no genetic change at all. It can also be brought about by gradual evolutionary change (*e.g.*, in habitat selection), subjecting a trait to a new selective regime; or by a regulatory mutation causing an already complex character set to be expressed in a new developmental context or life-stage (heterochrony).

Once a switch mechanism is established selection can modify alternatives in the new context, by what I would venture to call the 'rule of

independent selection of independently expressed phenotypes.' As in the case of juvenile and adult, and male and female characters, to the degree that alternative phenotypes produced by a single genotype are independently expressed, they are independently subject to selection and can become separately specialized to their particular circumstances and functions (West-Eberhard, 1986). At the same time, selection can modify and refine the switch mechanism in its new context so that the facultative alternative traits are increasingly expressed only when likely to be advantageous.

In this paper I shall argue that major steps in social evolution, such as the origin of group life and of helping behaviour, likely occur *via* pleiotropic effects and contextual shifts rather than by allelic replacement. Not only does this hypothesis accord better with comparative data than allelic replacement hypotheses, but it better accomodates the fact that social traits are usually, if not always facultatively expressed—they occur or fail to occur in response to differences in the developmental or social conditions of individuals, rather than due to consistent allelic differences among them.

3.2 EVOLUTION OF FLEXIBLE SOCIAL STRATEGY IN WASPS

By far the majority of aculeate wasp species are 'solitary.' That is, individual females nest alone, laying eggs and providing food for their larvae independently. The social wasps (Vespidae) probably arose from nest-building solitary ancestors, *via* a primitively social stage like that seen in many extant species, in which there is nest sharing by more than one conspecific female but no differentiation of associated females into egg-laying 'queens' and non-egg-laying 'workers' dedicated to brood care (Evans, 1958; Evans and West-Eberhard, 1970; West-Eberhard, 1978a).

In solitary wasps each individual female performs all of the tasks associated with maternal care, including nest-building, provisioning of cells, egg-laying, and (in many species) nest defence. Most solitary species are 'mass provisioners;' they seal the egg in a cell with sufficient prey to support its entire larval development. Others resemble the social wasps in being 'progressive' provisioners, giving prey to the growing larva little-by-little as it is consumed. The ovary of a solitary wasp contains only one mature oocyte at a time. As a result, the ovary of a solitary female that has just laid an egg is strikingly depleted of large oocytes. This is especially true of progressively provisioning females, in which there is a lengthened

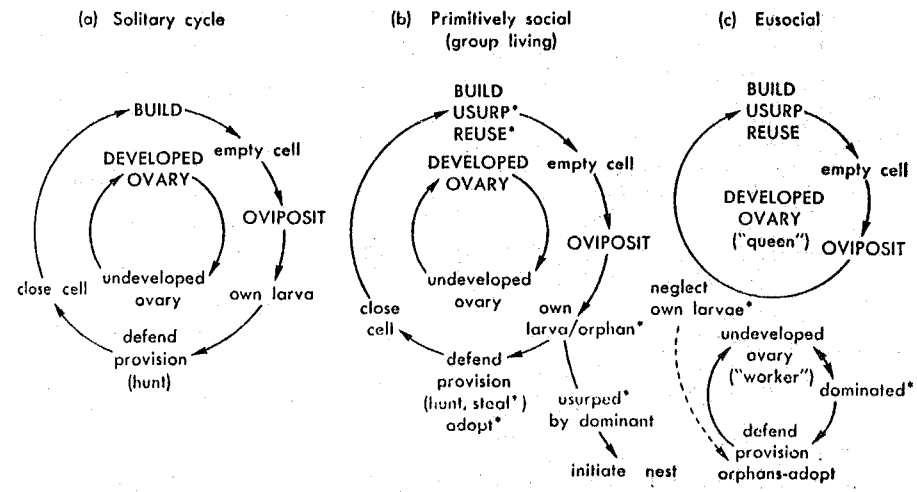

Fig. 3-1. Social evolution *via* contextual shift in wasps. (a) represents the ovarian and behavioural cycles of a progressively provisioning solitary wasp. (b) is based on observations of *Z. miniatus*, and could be derived from (a) *via* contextual change with the advent of group life under selection for remaining at the maternal nest. (c) represents a cycle like that of *Polistes* and other eusocial wasps in which selection for success in social competition has led to effective mechanisms of control of the reproduction of subordinate group members, with a consequent rise in the number of ophans as well as ovary-suppressed females inclined to adopt them. Asterisks (*) indicate novel occurrences that could be indirect or emergent results of selection producing (b) group living, and (c) effective dominance.

interval between the production of mature eggs (see Evans, 1966). In progressively provisioning solitary wasps the ovarian cycle of alternate development and depletion coincides with a behaviour cycle of alternate cell-building and oviposition (during the ovary-developed or 'gravidic' phase), and cell provisioning, defence, and sealing (during the ovary-undeveloped or 'agravidic' phase, in which the ovary lacks mature oocytes) (Fig. 3-1a). In other words, even in solitary wasps there is a 'queenlike' association of cell building and oviposition with ovarian development (*cf.* West-Eberhard, 1969, on *Polistes* queens), and a 'workerlike' association of provisioning and nest care with ovarian depletion.

In a study of the primitively social wasp *Zethus miniatus* Saussare (Eumenidae), I found a proliferation of alternative behaviour patterns not observed in solitary wasps (Fig. 3-2). Females with well-developed ovarian

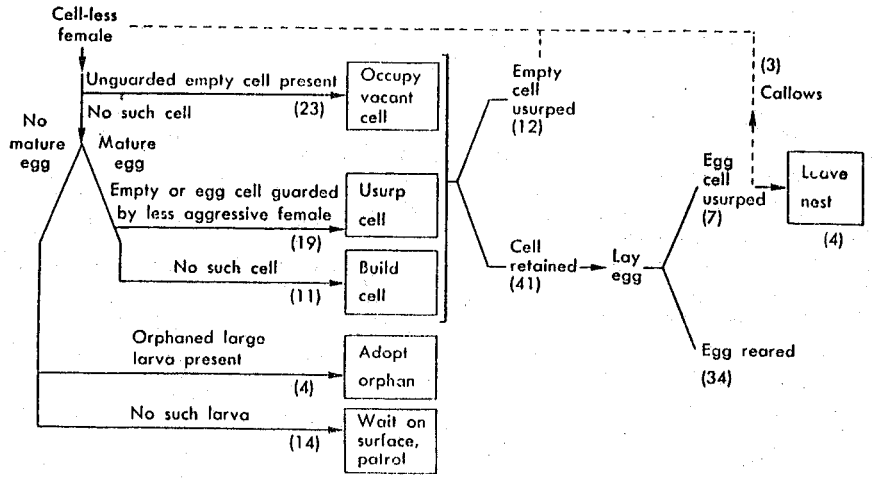

Fig. 3-2. Alternative behaviour patterns in *Z. miniatus* Saussure. Numbers in parentheses indicate number of times each situation was seen or could be deduced from records of 17 females resident on a nest observed daily for 115 days (13 May–18 July, 1972, Cali, Colombia). The 'wait-on surface, patrol' alternative includes only cases lasting one day or more.

eggs (just prior to oviposition) sometimes constructed a cell and then oviposited, as in solitary wasps; but they performed the alternative patterns of ovipositing in vacated pre-existing cells, or using cells usurped from other females. Females presumably lacking a mature ovarian egg (having recently oviposited) engaged in brood care activities just as do solitary females, provisioning their own larvae, guarding their own cells, and sealing the cell following completion of provisioning. However, they also performed additional, alternative patterns, such as nesting in groups rather than solitary nest founding; stealing provisions from neighbouring cells rather than hunting; and adopting orphaned larvae. Independent nest-founding occurred in females whose cells had been usurped. Adoption occurred in two kinds of females likely to have undeveloped or slowly developing ovaries: (1) those that had recently oviposited but whose egg or small larva had been destroyed by a usurper; and (2) an aged (wing-worn), infrequently ovipositing female. *Z. miniatus* thus showed several situation-sensitive behaviour patterns not seen in solitary wasps. However, it would probably be misleading to consider the novel patterns (such as

life in groups, stealing of provisions, usurpation of cells, and adoption of orphans) specially evolved, with each corresponding to a separate set of alleles established by natural selection. All of these condition-sensitive alternatives can be explained as consequences of contextual changes superimposed on the pre-existing behavioural repertoires of solitary females. This could have been brought about by a single trait favoured by selection in another context: namely, re-use of pre-existing cells (*e.g.*, in a solitary species where cell construction is energetically costly) (This and other contexts favouring nest-sharing in primitively social insects are discussed in relation to eusocial origins by Evans, 1977; Eickwort, 1981; Brockmann, 1984; and Andersson, 1984.) Re-use of cells at the natal nest, would lead (as a pleiotropic effect) to group life among the descendants of the founding female. Then, *via* this shift in context from solitary to group life, the cleaning behaviour usually associated with cell re-use (see Evans, 1966) could lead to the observed elimination of eggs and small larvae found in poorly defended cells and thus cell usurpation; the carrying and provisioning response to prey of a hunting solitary female could lead to stealing of prey encountered in cells of other females; and the feeding response to hungry larvae by a progressively provisioning female could lead to adoption of orphans contacted by a temporarily broodless female in the brood-caring phase of her solitary cycle (misdirected maternal care). Specific new genetic alleles are thus not required to produce any of these novel phenotypic patterns. Instead they could all originate as products of change in the social environment due to evolutionary change in another context (economy of cell construction), and its effects on a response repertoire likewise evolved in another context (solitary reproductive life).

What would be required to derive a highly social reproductive division of labour (sterile workers) from a situation like that observed in *Z. miniatus*? Genetic models have dealt with this question by postulating a gene for altruism (self-sacrificing helping behaviour). However, worker sterility could likewise have originated as a collateral (or pleiotropic) effect of selection favouring behaviour that is anything but altruistic, namely, behaviour improving success in social competition. Given a primitively social species, any circumstance increasing the frequency of group nesting as opposed to solitary nesting would increase the frequency of social interaction with other individuals, and the importance for reproductive success of success in social competition. Group-nesting could be favoured by factors (such as nest-site availability) extrinsic to the group, and/or by

the beneficial effects of group nesting itself, such as mutual aid in nest building, food sharing, communal defence, and care of orphans.

An increased premium on efficiency of intragroup competitive mechanisms, such as aggressive territorial dominance, eating the eggs of others, or manipulation of larval diets of some offspring, could lead to a monopoly of egg-laying by one or a few females. Aggressive females preoccupied with terrirorial defence at the nest do not forage, and may seriously neglect their broods (as is known to occur in *Polistes erythrocephalus* during bouts of strong dominance conflict—West-Eberhard, 1969). At the same time, they could create foster mothers among their companions by simply restricting their access to oviposition sites: ovarian degeneration (oocyte resorption) upon failure to oviposit is a widespread (perhaps universal) and ancient characteristic of the Hymenoptera, known to occur facultatively in a very diverse array of species, from parasitoids to higher aculeates (see Pardi, 1948; Flanders, 1969). Furthermore, gravidic and agravidic states are accompanied by behavioural differences even in the Parasitica (Flanders, 1969). Following the pattern observed in *Z. miniatus* females with undeveloped ovaries might readily become permanent foster mothers of the dominants' neglected (orphan) brood. This situation could be maintained in the face of selection favouring other conceivable alternatives (such as idle waiting for a chance to dominate) if the 'misdirected' brood-care activities were to prove genetically profitable to subordinates, under kin selection (*e.g.*, among related females re-using cells on the natal nest—see West, 1967); or in the context of mutualistic group maintenance (see Lin and Michener, 1972; West-Eberhard, 1978b, 1981). By this interpretation kin selection is seen as possibly playing a role in evolution of regulation of helping behaviour (West-Eberhard, 1987), but is not necessary to explain the *origin* of condition-dependent aid or sterility. Kin selection takes effect when helping associated with reduced fecundity happens to appear (for the reasons just outlined) in groups of kin (see also Brown, 1974; Andersson, 1984). The transitions in a scheme for the evolution of eusociality without a gene for altruism are summarized in Fig. 3-1, which is drawn so as to emphasize the parallel nature of reproductive behaviour in the solitary, primitively social, and highly social wasps discussed above. Helping behaviour induced by contextual change can persist (without genetic change) as long as it is advantageous to the helper; and it can become as widespread (without the spread of a special gene inducing its performance) as the conditions inducing it.

3.3 CONTEXTUAL SHIFTS AND PHENOTYPIC FLEXIBILITY IN SOCIAL EVOLUTION

Three of the major innovations in the evolution of social life in insects —group living, helping behaviour, and social parasitism—occur, and probably originated, as facultative alternative phenotypes (see Michener, 1985; West-Eberhard, 1986). The same seems to be true for major aspects of sociality in other groups (for a recent review of the similarities of preadaptations for sociality in birds, mammals and insects, see Andersson, 1984). For example, intraspecific social parasitism in the white-fronted bee-eater (*Merops bullockoides*) occurs facultatively when breeding females happen to lose their mates or nests just prior to laying eggs. As in social insects, social parasitism is a mosaic phenotype facilitated in this special situation because of such pre-existing traits (or 'preadaptations') as nesting in aggregations and breeding synchronization within groups (*e.g.*, see Wcislo, in preparation, on insects; Emlen and Wrege, 1986, on birds). As in insects, facultative avian helpers at the nest are often individuals excluded from breeding themselves while in populations of breeders likely to be genetic relatives (Brown, 1974; Brown and Pimm, 1985; Emlen and Wrege, 1986).

The 'allomothers' of Indian elephants (*Elephas maximus* L.) are adult females which have earlier given birth to calves. They "suckle other calves when they have no calf of their own, sometimes as much as the mother herself" (Gadgil and Nair, 1984). On the other hand, brood care helpers in cichlid fish (*Lamprologus brichardi*) are reproductively mature individuals which remain in the parental territory and engage in parental care prior to reproducing themselves, and as an alternative to waiting in extra-territorial aggregations for a chance to breed (shelter sites suitable for breeding are scarce and aggressively defended) (Taborsky, 1984). These studies, and observations of helpers in primitively social insects, invite further comparative study of the physiology and ethology of parental care in the solitary relatives of species containing helpers. In some groups (*e.g.* rodents) detailed studies of maternal behaviour and endocrinology suggest that development of normal parental responses might require completing a sequence including giving birth and early contact with infants (reviewed in Hinde, 1970). Adoption of orphans in such a group might less readily follow contextual change (*e.g.*, the advent of group life) than in species (or for behaviours) where the simple presence of the young

or their signals towards adults are sufficient to elicit parental responses. Certain questions raised by a contextual shift hypothesis for the origin of helping are amenable to experimentation. As suggested by Clutton-Brock during discussions at this symposium, one could (in the case of solitary wasps) investigate the possibility that ovarian regression automatically follows inability to oviposit (*e.g.*, due to the occupation of nest cells by other females) by experimentally preventing oviposition in solitary wasps. Sakagami and Maeta (this volume) have conducted pioneer experiments testing the importance of contextual change by manipulating solitary bees so that they nest in groups (see also, comparative studies by Michener, 1985). Even if their bees prove to be secondarily solitary (in which case forced group life could stimulate helping behaviour as a reversion, rather than simulating its origin), their results show the ease with which a species might cross back and forth over the border between solitary and eusocial life with little or no genetic change.

It is also important to realize that even when contextual change alone does not produce an immediate contextual shift in expression of a 'pre-adapted' trait (such as parental care), the potential for a contextual shift still exists but might require some evolved regulatory change (*e.g.*, generalization of stimuli triggering the proper hormonal state). For this reason it is of great interest for hypotheses regarding evolutionary origins to the study in detail how traits like parental care, aggression and mating behaviour are regulated in particular species and groups. In some cases only certain elements of behaviour may be shifted following a context change, due to the peculiarities of their regulation (and likelihood of elicitation in the new circumstance).

Except in the case of 'chronospecies' or serial transformation, in which new forms gradually replace older ones in the same lineage, evolutionary change *via* allelic replacement implies either lineage bifurcation (new traits originate as new branches on a phylogenetic tree), or equal fitness of the two forms so as to maintain a stable genetic polymorphism (see Maynard-Smith, 1982). In a view of phylogeny that includes the possibility of phenotypic flexibility, new traits can originate as stable developmental or behavioural bifurcations within a lineage. As already explained, new traits first appear due to either genetic change or contextual shifts resulting from extrinsic factors or evolution in other contexts. As long ago appreciated by ethologists studying animal communication (who saw, for example, elements of feeding behaviour in the courtship displays of birds

—see Eibl-Eibesfeldt, 1970) new traits can be constructed as mosaics of pre-existing traits ('pre-adaptations') due to the novel effects of old behaviours in new situations and what amounts to behavioural pleiotropy (like the 'relational pleiotropy' of morphological traits—Raff and Kaufman, 1983).

Given the condition-sensitive nature of all phenotypes, evolution by 'epigenetic divergence' may be very common. The fact that the situation-dependence of phenotype production is universal, and facilitates the evolution of adaptive phenotypic flexibility as described here probably also helps explain why facultative alternative social behaviours are so common in nature, whereas allelic-switch alternatives depicted by genetic models (situation-insensitive 'genetic' polymorphisms and pure or mixed ESS's requiring equal fitness of alternatives) are proving relatively uncommon (see Dominey, 1984; West-Eberhard, 1986).

Once a situation-linked alternative phenotype has originated and become established as a stable feature of a population it may become further elaborated or specialized by the addition of genetic modifiers. By this means an alternative that is originally only behavioural can become morphologically specialized as well. Considerable phenotypic divergence between facultative alternatives can evolve, as illustrated by the worker subcastes of certain social insects, the major and minor forms of fighting beetles, the winged and wingless forms of certain insects, and the soldier and normal forms of aphids (reviewed in Aoki, 1982). This can occur once a switch mechanism is established (whether allelic or situational), in accord with the 'rule of independent selection of independently expressed traits' mentioned above. However, for morphological rather than just behavioural specialization to evolve the situation-sensitive or allelic switch must occur relatively early in development, along with (in the case of facultative traits) adequate cues for triggering an adaptively appropriate switch. In the case of both horned beetles and social insects, the switch seems related to larval nutrition and/or size (Eberhard, 1982; Nijout and Wheeler, 1982). Larval size is a variable that may well be a dependable predictor of appropriate phenotype (whether to develop a fighting *vs.* non-fighting, or queen *vs.* worker morphology and behaviour).

3.4 PHENOTYPIC FLEXIBILITY AND THEORETICAL ENIGMAS

Facultative expression solves some classic conundrums of social evolution generated by modern genetic theory. Both group life and helping behaviour have been considered difficult-to-evolve traits, group life because of the automatic disadvantages of competition within groups (Alexander, 1974) and helping behaviour because of the supposed cost to the helper of aiding a genetic competitor. Even with a kin-selection explanation there has remained some uneasiness about a model that predicts evolution accompanied by a reduction in mean fitness, and that could not explain the initial spread of the alleles in question (Hamilton, 1964; Peck and Feldman, 1986) (kin selection requires that a group of allelic co-carriers be already present before it can act). The switch mechanisms of facultative phenotypes originate, and can be finely tuned by selection, such that a particular alternative is expressed only when likely to be advantageous. They are therefore buffered from some of the effects of negative selection by conditional expression (West-Eberhard, 1986). How this could work in nature is illustrated by the facultative occurrence of group life and adoption of orphans in *Z. miniatus*: group life is associated with the opportunity to exploit the avaiability of ready-made cells, and when these are monopolized by others, excluded females apparently adopt the solitary-nesting option. Individuals care for orphans only when themselves temporarily non-reproductive (lacking a mature ovarian egg).

Permanent workers in the social Hymenoptera are females permanently unable to lay eggs, either due to manipulation of larval diet, or other factors producing marked long-term social subordinacy. For such a female, which lacks other options, there is no cost to helping behaviour, and no altruism. There is also no reduction in mean fitness among helpers who by helping relatives or other nest-mates of some potential future use manage to salvage some reproductive success in a situation where they would otherwise reproduce little or not at all.

Another enigmatic feature of social life explained by flexible strategy is ritualized fighting that stops short of physical harm, and implies voluntary submission to competitors. The ritualized recognition of victory and defeat is symptomatic of the presence of a productive alternative pattern for subordinate individuals. Otherwise, selection would favour fighting to the death (see West-Eberhard, 1979). Once a competition-dependent pattern has evolved, as just described for helping behaviour in socially suppressed wasps, selection should act to set appropriate thresholds for advantageous subordinacy and performance of the alternative pattern associated with subordinacy. In the case of social wasps, dominance and ovary development are so closely associated that relative dominance may act as an indicator of relative reproductive capacity of contesting females (West, 1967). Selection could thus act to set the degree of difference in aggressiveness likely to lead to profitable subordinacy in a female whose alternative is to rear the brood of the dominant female (her genetic kin). In other social organisms, ritualized dominance and 'play' may sometimes function in regulation of flexible strategies, helping losing interactants to predict the likely profitability of waiting for future dominance *vs.* such alternatives as dispersal or surreptitious resource acquisition (see Wynne-Edwards, 1962; Fagen, 1981).

3.5 INDIVIDUAL PLASTICITY AND THE ORGANIZATION OF GROUPS

Finally, it is phenotypic flexibility that gives rise to the social structure of groups. In *Z. miniatus* females are channelled into different temporary social roles (such as cell-builder, usurper, robber, or foster mother) by a complex of factors including ovarian condition, age, availability of vacant cells, and mortality of nest-mates (availability of orphaned larvae). Social competition, which can appear even in solitary species when individuals meet (Evans, 1977), plays a part in role determination, influencing the probability of cell usurpation and independent nest founding. In more highly social species, where independent nesting is rare or unknown, social role determination and social organization is even more dependent on social competition: whether or not a particular individual is a queen or a worker depends on her dominance status within a group. This is probably a general quality of social behaviour in animals: intra-group social organization is a result of flexible behaviour under social competition for limited resources (see Emlen and Wrege, 1986, on bee-eaters; Brown, 1974, on jays; Ligon, 1981, on woodhoopoes; Carlisle and Zahavi, 1986, on Arabian babblers; Hall and DeVore, 1965, on male primates).

3.6 CONCLUSION

Spectacular progress has been generated in evolutionary biology by recognition of the gene as the fundamental unit of evolution—the entity

that changes in frequency over time, due to its positive or negative effects on the reproduction and survival of individuals, groups, populations, and species. I predict that another era of progress will ensue with more attention to the developmental nature and evolution of phenotypes.

The gap between genetics and ethology is occupied on the proximate level by development, and on the evolutionary level by selection favouring phenotypic transitions and pleiotropic effects that have organized development to produce the mosaic phenomenon we recognize as a behavioural phenotype. In view of the probable evolutionary history of the social wasps, for example, the 'genes for helping behaviour' can be said to include those influencing cell construction, cell re-use, larval feeding, oocyte resorption, aggressive dominance, and egg-eating, to mention only a few. And the evolution of the helper phenotype might involve not only the increase in frequency of all of these genes but also adjustment under natural selection of thresholds for their advantageous expression in situations themselves undergoing evolutionary change.

The comparative study of flexible strategies in related species is crucial to understanding the evolution of social phenotypes, which combine ancient or widespread flexible characters to give new results in new circumstances. We can still profit from older discussions of social evolution by comparative zoologists (*e.g.*, Roubaud, 1916; Wheeler, 1928) because they were written in an era that, being poor in genetic models, concentrated on attempting to explain phenotype transitions, and recognized (at least implicitly) the facultative and mosaic nature of important traits (see also Evans, 1977). Recent attempts to combine comparative ethology, ontogenetic study, and modern genetic theory (*e.g.*, Elmen, 1982a, b; Craig, 1983; Brown, 1985) are encouraging, as are improved methods of phylogenetic analysis (*e.g.*, see Felsenstein, 1985, for a discussion of some of their consequences for comparative study). Only through a synthesis of comparative ethology and genetic theory (including ideas drawn from both regulatory and population genetics) will it be possible to construct realistic modern hypotheses of social evolution.

SUMMARY

Virtually all social traits (*e.g.*, helping behaviour, group life, aggressiveness, subordinacy, and signalling behaviour) are facultative or condition-sensitive in nature. This has important consequences for theories of social evolution. Since a social phenotype is a product of the interaction of genotype and situation, it is clear that evolutionary change in a phenotypic character can occur due to genetic change under selection on that character (the usual way of thinking about social evolution). However, it can also occur due to environmental and evolved contextual change, or due to pleiotropic effects of genetic change under selection in other contexts. Comparative studies of wasps indicate that reproductive division of labour between non-egg-laying foragers ('workers') and egg-laying non-foragers ('queens') could have begun *via* contextual shifts when group living originated as a pleiotropic result, or side-effect, of behavioural change in another context: namely re-use of vacated brood cells. Cell re-use can lead to group life on the natal nest; and the resultant social competition can produce a division of labour derived from a solitary reproductive cycle, in which egg-maturation (and queenlike behaviour) alternates with ovarian depletion (and workerlike behaviour). The realization that major new social traits (such as group life, helping behaviour, and social parasitism) can originate as condition-sensitive bifurcations in a behavioural or developmental sequence calls for a view of behaviour phylogeny in which old and new traits can persist side-by-side within a lineage rather than necessarily occupying different phylogenetic branches or satisfying equilibrium conditions for a genetic polymorphism. Behavioural flexibility of individuals gives rise to role differentiation and social organization within groups. It also helps account for certain ritualized displays, which function as parts of switch (or decision) mechanisms during competitive role determination among group members. Facultative expression has the effect of buffering new traits against negative selection while they become established and elaborated under selection in the contexts where they are expressed. Comparative study of flexible strategies is crucial to understanding the evolution of mosaic social phenotypes, which combine ancient traits to give new results in new circumstances.

Acknowledgements

I thank J. Alcock, W. G. Eberhard, M. Lawton, K. Sakurai, M. Spivak and J. Wenzel for helpful comments on the manuscript, and S. T. Emlen for unpublished information on birds. R. Bohart kindly identified specimens of *Z. miniatus*.

REFERENCES

Alexander, R. D. (1974) *Annu. Rev. Ecol. Syst.*, 5: 325–383.
Andersson, M. (1984) *Annu. Rev. Ecol. Syst.*, 15: 165–189.
Aoki, S. (1982) Proc. Ninth Cong. Int. Union Study Social Insects, Boulder, Colorado, pp. 154–158.
Bradshaw, W. E. (1973) *Ecology*, 54: 1247–1259.
Brockmann, H. J. (1984) *In* "Behavioural Ecology", 2nd. ed. (Krebs, J. R. and Davies, N. B., eds.), pp. 340–361, Sinauer Associates, Sunderland, Mass.
Brown, J. L. (1974) *Am. Zool.*, 14: 63–80.
Brown, J. L. (1985) *In* "The Comparative Development of Adaptive Skills: Evolutionary Implications" (E. S. Gollin, ed.), pp. 137–171, Lawrence Erlbaum Associates, London.
Brown, J. L. and Pimm, S. L. (1985) *J. Theor. Biol.*, 112: 465–477.
Carlisle, T. R. and Zahavi, A. (1986) *Behav. Ecol. Sociobiol.*, 18: 339–354.
Craig, R. (1983) *J. Theor. Biol.*, 100: 379–397.
Dawkins, R. (1982) "The Extended Phenotype," W. H. Freeman and Company, Oxford.
Dobzhansky, T. (1937) "Genetics and the Origin of Species," Columbia Univ. Press, N.Y.
Dominey, W. J. (1984) *Am. Zool.*, 24: 385–396.
Eberhard, W. G. (1980) *Sci. Am.*, 242 (3): 166–182.
Eberhard, W. G. (1982) *Am. Nat.*, 119: 420–426.
Eibl-Eibesfeldt, I. (1970) "Ethology: The Biology of Behavior," Holt, Rinehart and Winston, Inc.
Eickwort, G. C. (1981) *In* "Social Insects Vol. II," (Hermann, H. R., ed.), pp. 199–280, Academic Press, New York.
Emlen, S. T. (1982a) *Am. Nat.*, 119: 29–39.
Emlen, S. T. (1982b) *Am. Nat.*, 119: 40–53.
Emlen, S. T. and Wrege, P. H. (1986) *Ethology*, 71: 2–29.
Evans, H. E. (1958) *Proc. Tenth Int. Cong. Entomol.*, 2: 449–457.
Evans, H. E. (1966) "The Comparative Ethology and Evolution of Sand Wasps," Harvard Univ. Press, Cambridge, Mass.
Evans, H. E. (1977) *Bioscience*, 27: 613–617.
Evans, H. E. and West-Eberhard, M. J. (1970) "The Wasps," Univ. of Michigan Press, Ann Arbor.
Fagen, R. (1981) "Animal Prey Behaviour," Oxford Univ. Press, New York.
Felsenstein, J. (1985) *Am. Nat.*, 125: 1–15.
Fisher, R. A. (1930) "The Genetical Theory of Natural Selection," Dover, N. Y.
Flanders, S. (1969) Proc. VI Cong. Int. Union Study Social Insects, Bern, pp. 47–53.
Gadgil, M. and Nair, V. (1984) *Proc. Indian Acad. Sci.*, 93 (3): 225–233.
Hall, K.R.L. and DeVore, I. (1965) *In* "Primate Behavior. Field Studies of Monkeys and Apes" (DeVore, I., ed.), pp. 53–110, Holt, Rinehart and Winston, New York.
Hamilton, W. D. (1964) *J. Theor. Biol.*, 7: 1–16.
Hinde, R. A. (1970) "Animal Behaviour: A Synthesis of Ethology and Comparative Psychology, 2nd ed.," McGraw-Hill, N. Y.
Leigh, E. G., Charnov, E. L., and Warner, R. R. (1976) *Proc. Natl. Acad. Sci. U.S.A.*, 73: 3656–3660.

Ligon, J. D. (1981) *In* "Natural Selection and Social Behavior" (Alexander, R. D. and Tinkle, D. W., eds.), pp. 231–243, Chiron Press, New York.
Lin, N. and Michener, C. D. (1972) *Q. Rev. Biol.*, 47: 131–159.
Mayr, E. (1963) "Animal Species and Evolution," Belknap Press of Harvard Univ. Press, Cambridge, Mass.
Michener, C. D. (1985) *In* "Experimental Behavioral Ecology and Sociobiology" (Hölldobler, B. and Lindauer, M., eds.), pp. 293–305, Gustav Fischer Verlag, Stuttgart.
Michod, R. E. (1982) *Annu. Rev. Ecol. Syst.*, 13: 23–55.
Nijout, H. F. and Wheeler, D. M. (1982) *Q. Rev. Biol.*, 57: 109–133.
Noonan, K. M. (1981) *In* "Natural Selection and Social Behavior: Recent Research and New Theory" (Alexander, R. D. and Tinkle, D. W., eds.), pp. 18–44, Chiron Press, New York.
O'Donald, P. (1980) "Genetic Models of Sexual Selection," Cambridge Univ. Press, Cambridge.
Pardi, L. (1948) *Physiol. Zool.*, 21: 1–13.
Peck, J. R. and Feldman, M. W. (1986) *Am. Nat.*, 127: 209–221.
Raff, R. A. and Kaufman, T. C. (1983) "Embryos, Genes, and Evolution: The Developmental-Genetic Basis of Evolutionary Change," Macmillan Publishing Co., Inc., New York.
Roubaud, E. (1916) *Ann. Sci. Nat. Zool. 19th Ser.*, 1–60.
Shapiro, A. M. (1976) *Evol. Biol.*, 9: 259–333.
Strassmann, J. E. (1981) *In* "Natural Selection and Social Behavior: Recent Research and New Theory" (Alexander, R. D. and Tinkle, D. W., eds.), pp. 45–58, Chiron Press, New York.
Taborsky, M. (1984) *Anim. Behav.*, 32: 1236–1252.
West, M. J. (1967) *Science*, 157: 1584–1585.
West-Eberhard, M. J. (1969) *Misc. Publ. Mus. Zool. Univ. Mich.*, No. 140: 1–101.
West-Eberhard, M. J. (1978a) *J. Kansas Entomol. Soc.*, 41: 832–856.
West-Eberhard, M. J. (1978b) *Science*, 200: 441–443.
West-Eberhard, M. J. (1979) *Proc. Am. Phil. Soc.*, 123 (4): 222–234.
West-Eberhard, M. J. (1981) *In* "Natural Selection and Social Behavior: Recent Research and New Theory" (Alexander, R. D. and Tinkle, D. W., eds.), pp. 3–17, Chiron Press, New York.
West-Eberhard, M. J. (1986) *Proc. Nat. Acad. Sci. U.S.A.*, 83: 1388–1392.
West-Eberhard, M. J. (1987) Proc. X Int. Cong. Int. Union Study Social Insects, Munich (in press).
Wheeler, W. M. (1928) "The Social Insects: Their Origin and Evolution," Harcourt, Brace and Company, London.
Williams, G. C. (1966) "Adaptation and Natural Selection," Princeton Univ. Press, Princeton, N. J.
Wynne-Edwards, V. C. (1962) "Animal Dispersion in Relation to Social Behaviour," Oliver and Boyd, Edinburgh.